VASCO
ASSEMBLY D60
QUICK GUIDE

MONTAGEHANDLEIDING | INSTRUCTIONS DE MONTAGE | MONTAGE-ANLEITUNG
MOUNTING INSTRUCTIONS | INSTRUKCJA MONTAZU | ISTRUZIONI DI MONTAGGIO

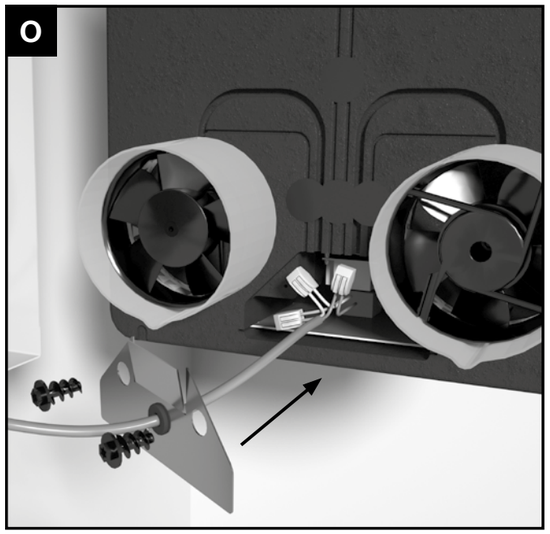

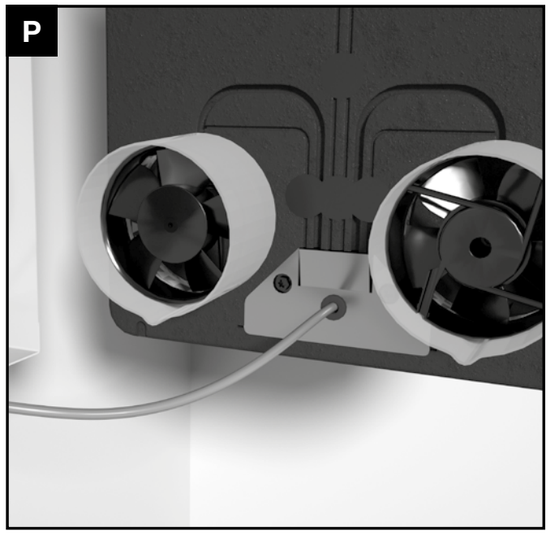

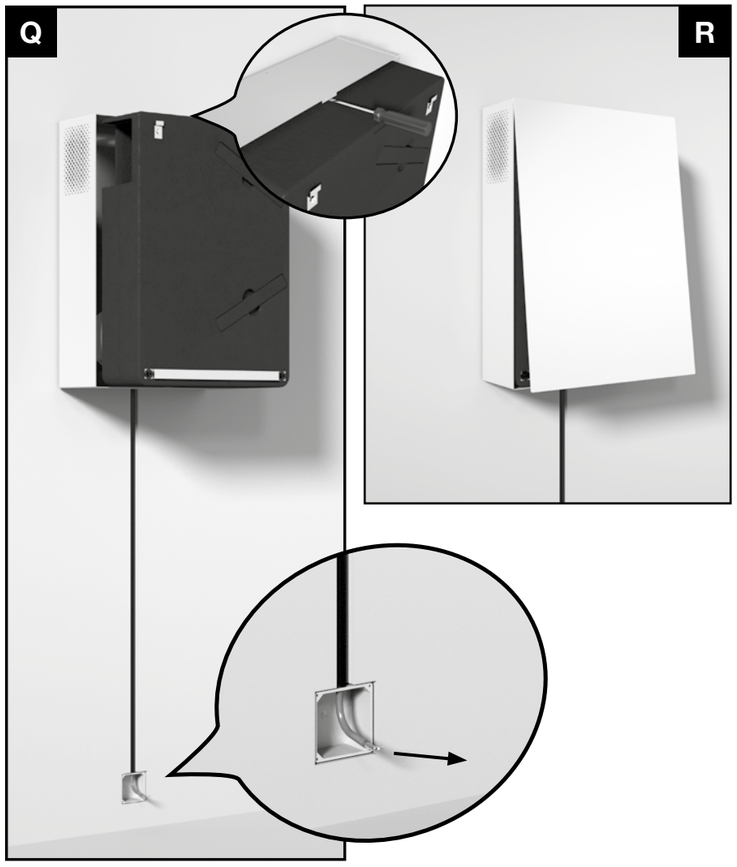

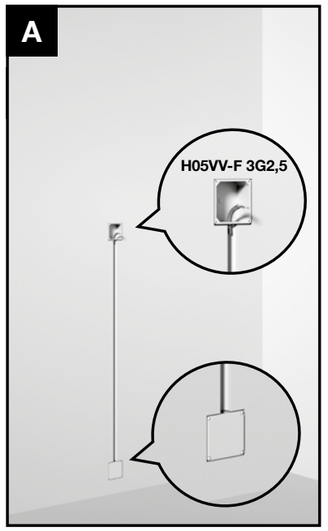

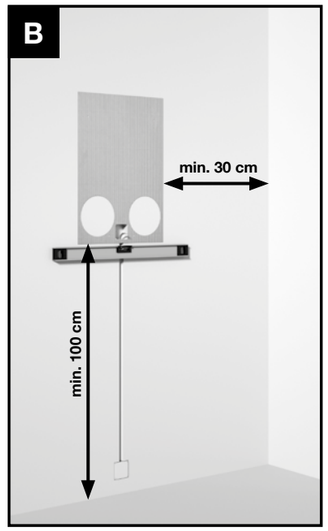

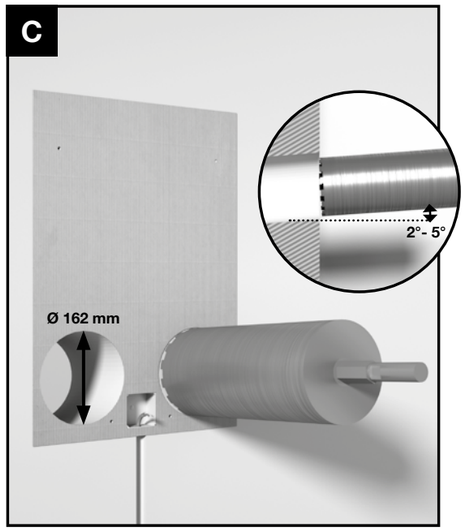

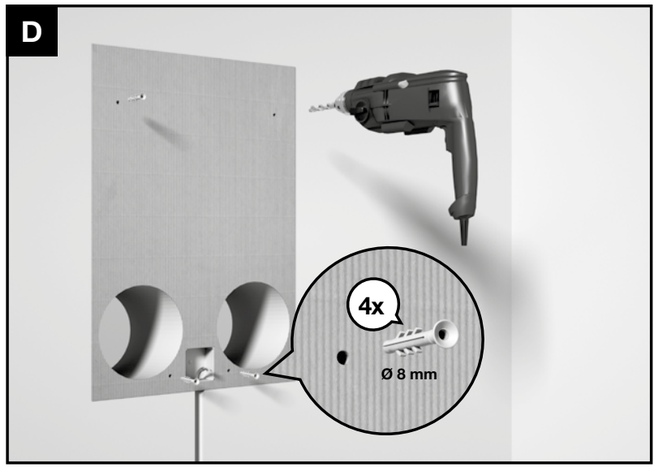

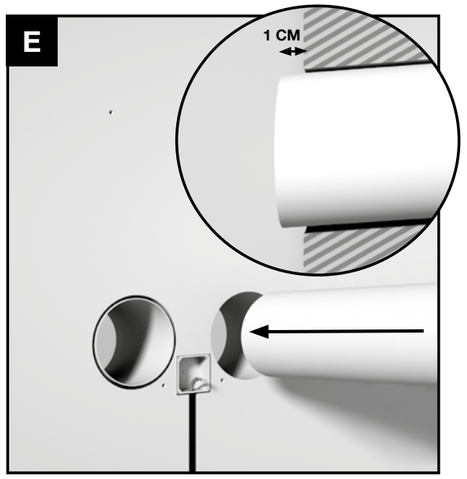

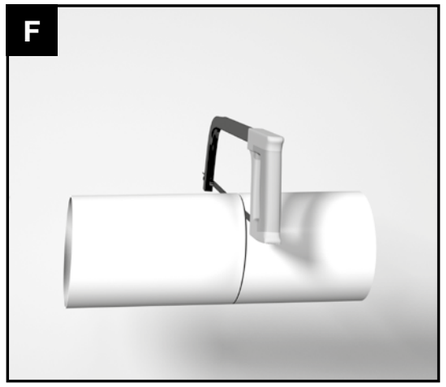

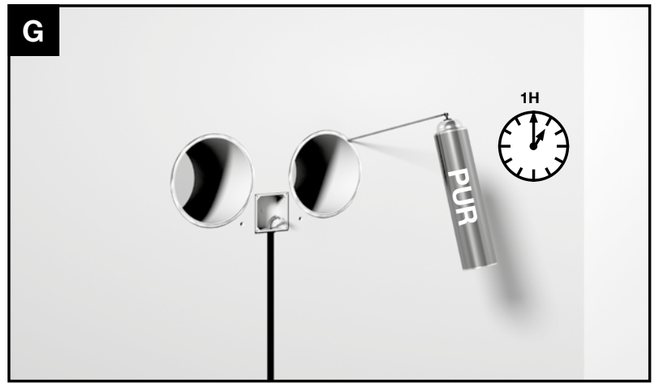

VASCO
Kruishoefstraat 50
B-3650 Dilsen
T. +32 (0)89 79 04 11
F. +32 (0)89 79 05 00
info@vasco.eu
www.vasco.eu

VASCO

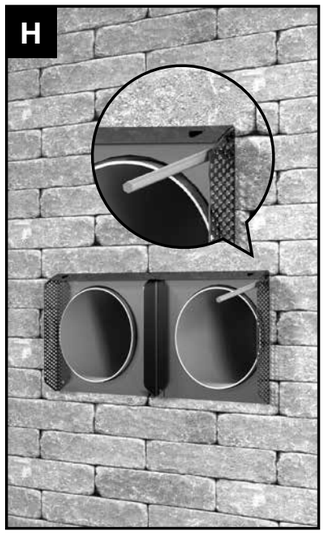

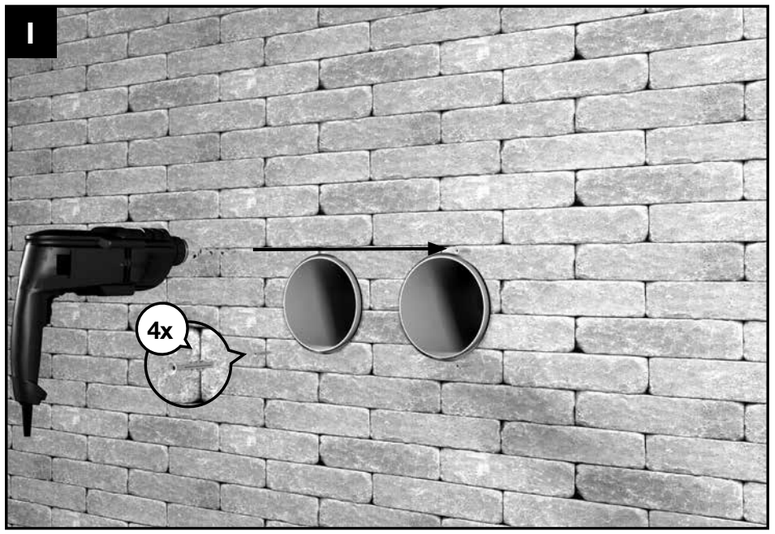

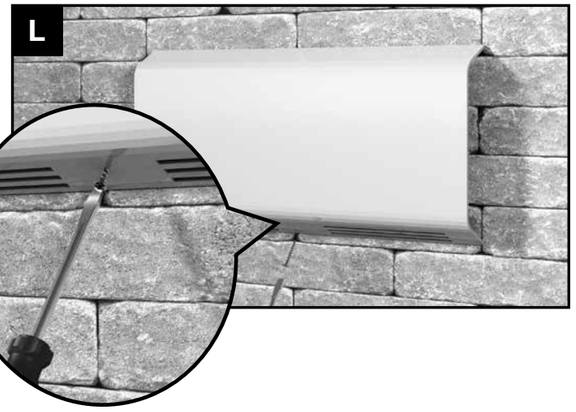

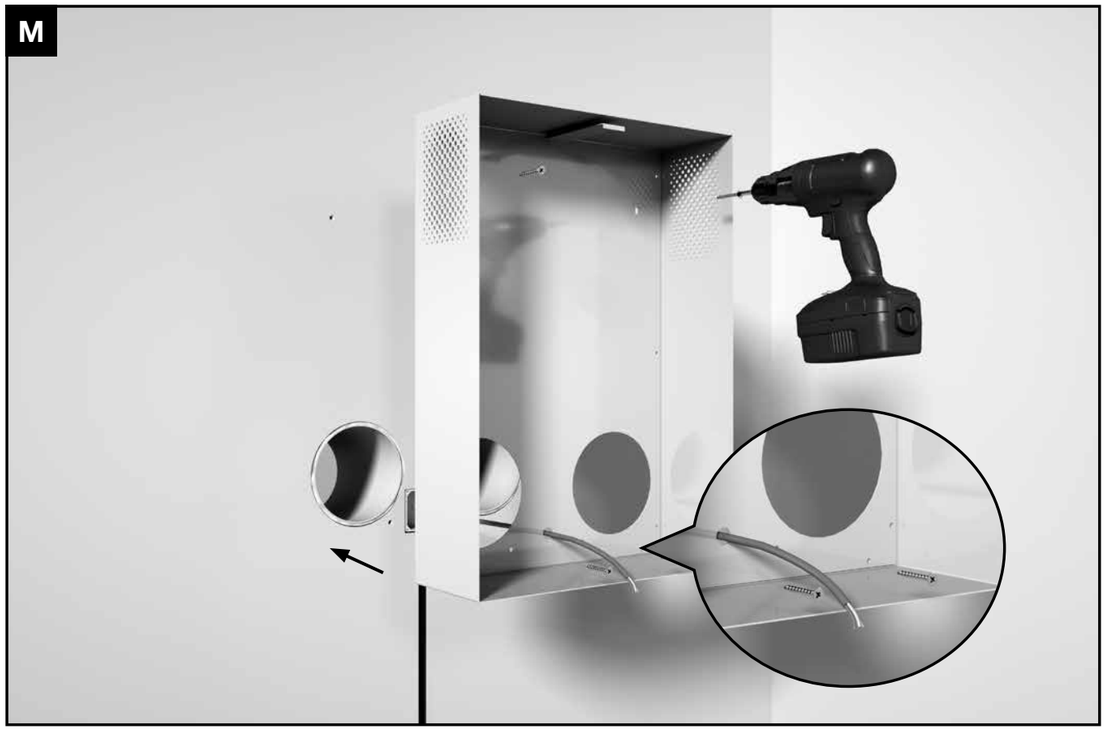

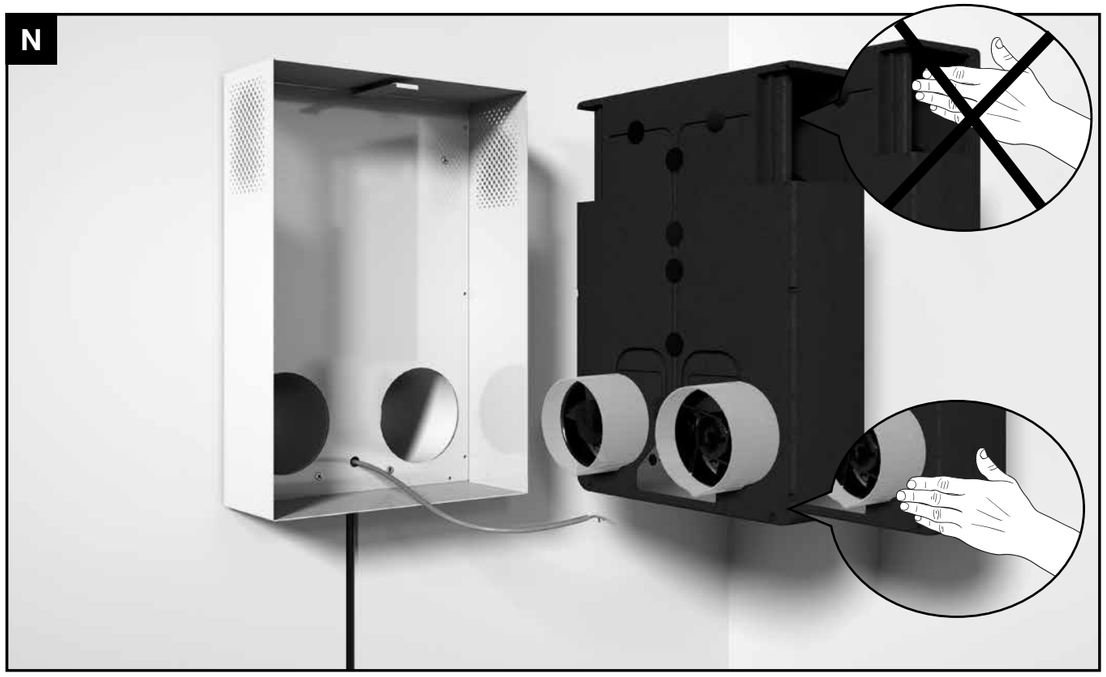

VASCO