Vasco EasyFlow®

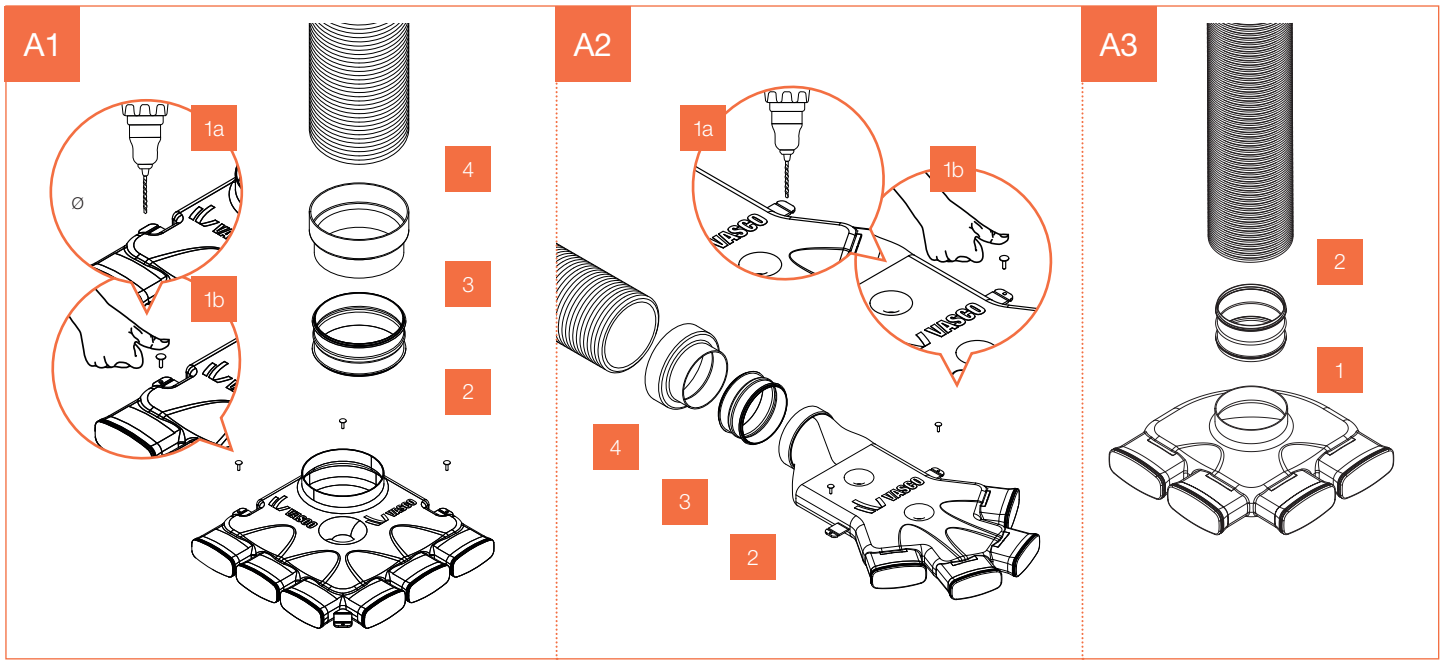

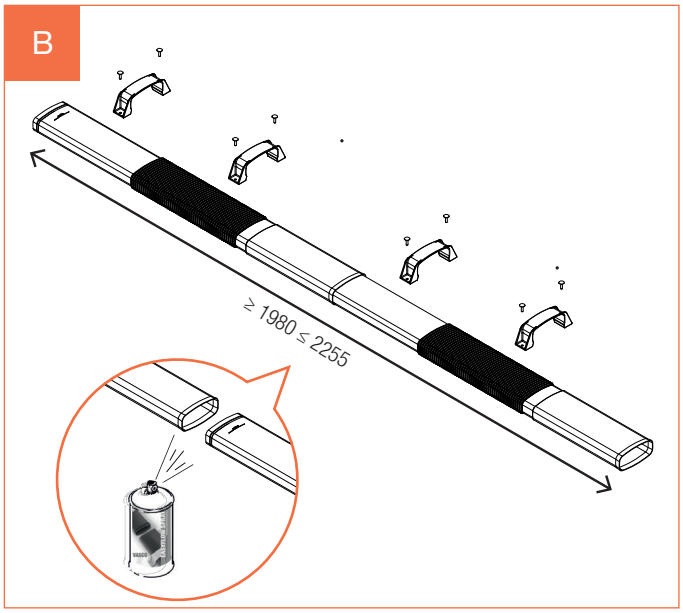

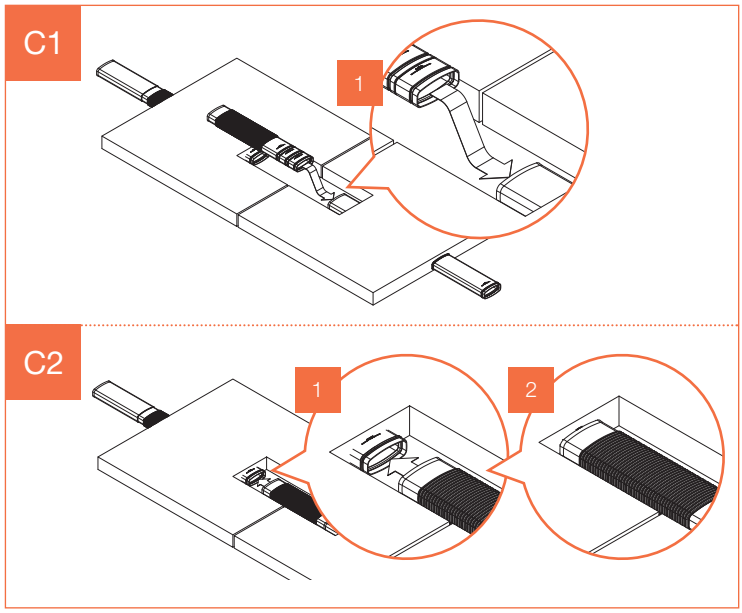

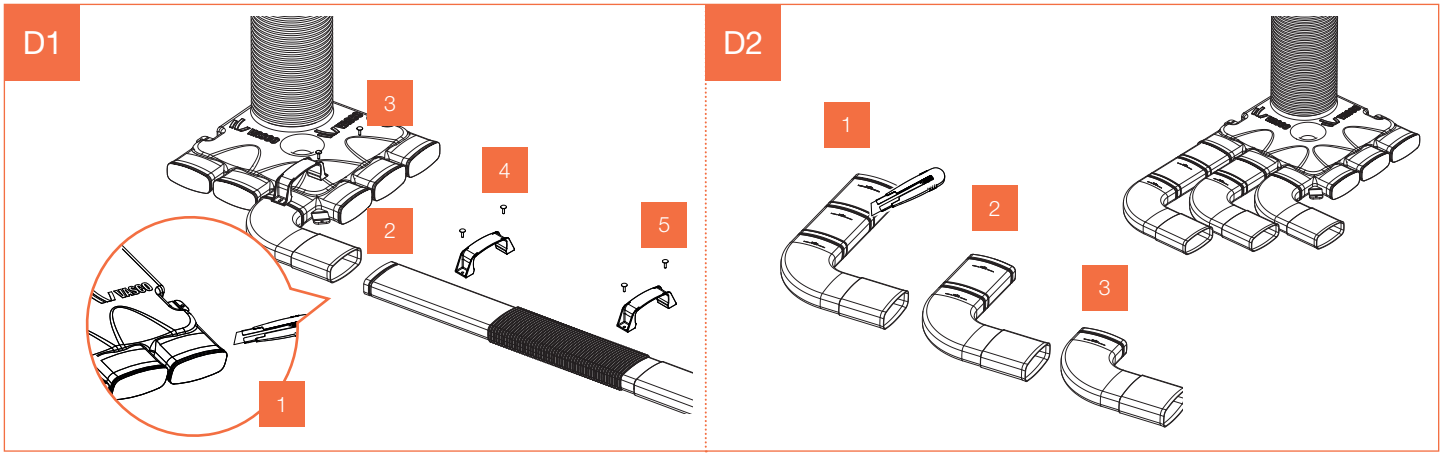

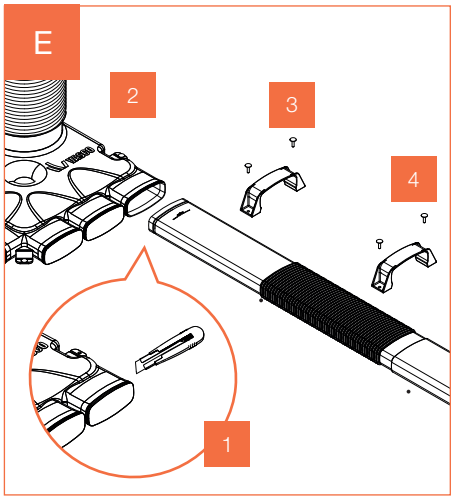
E
2
3
4
1

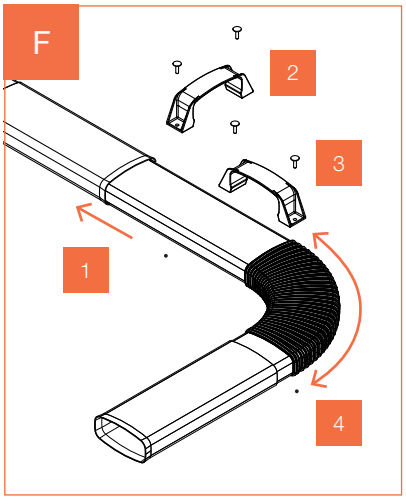
F
2
3
1
4

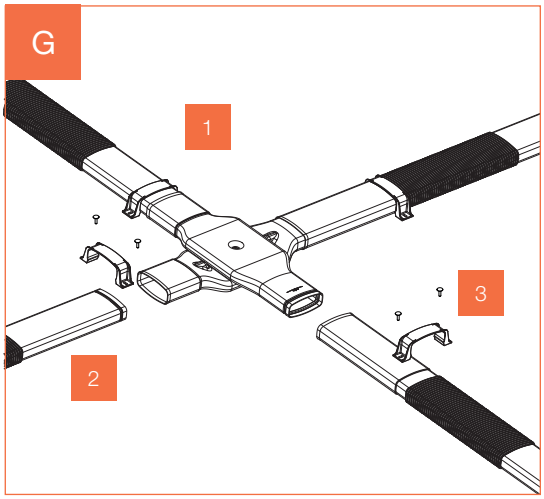
G
1
3
2

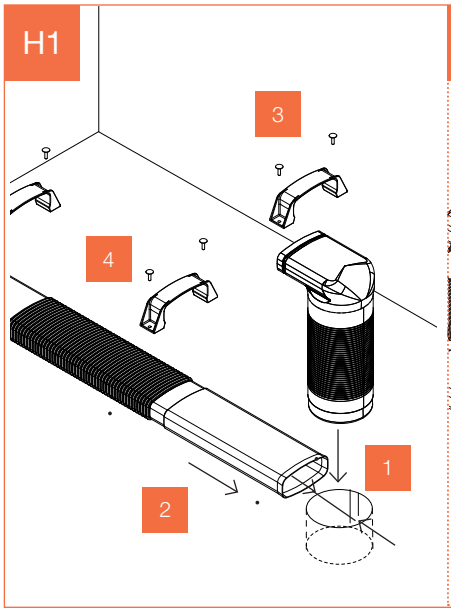
H1
3
4
1
2

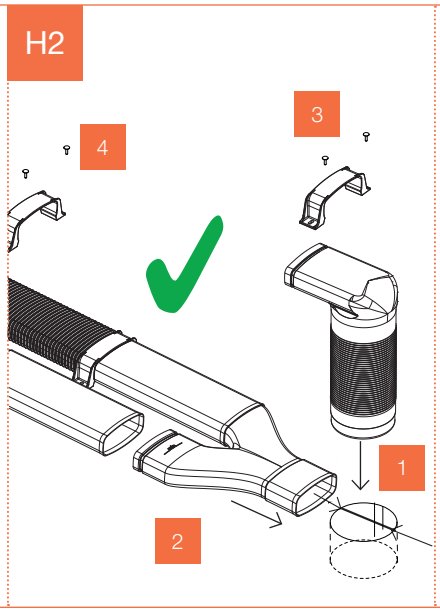
H2
4
3
1
2

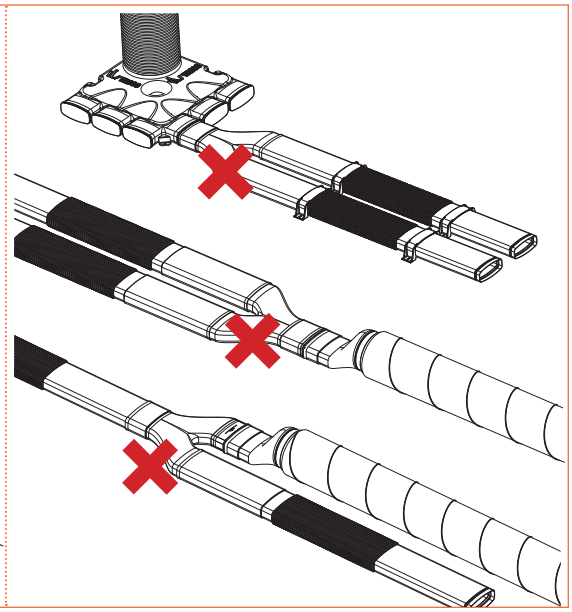

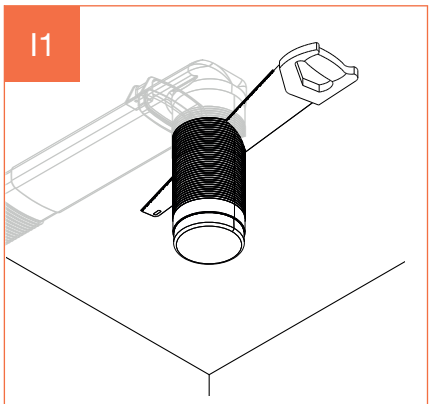
I1

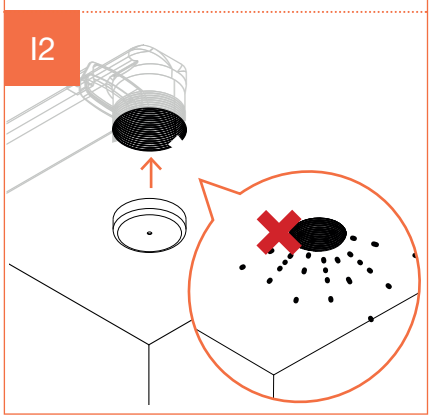
I2

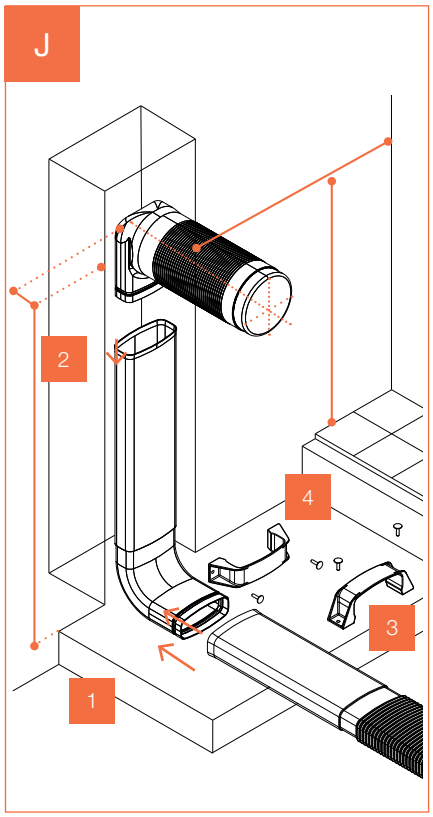
J
2
4
3
1

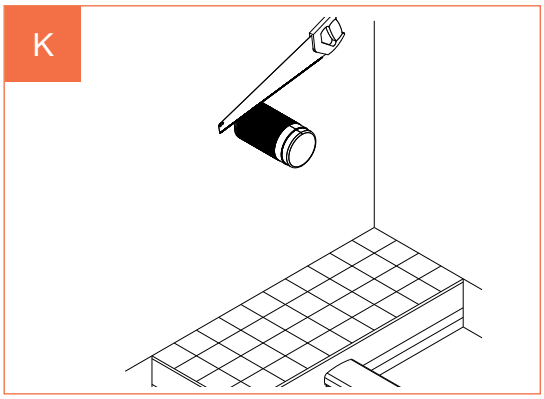
K

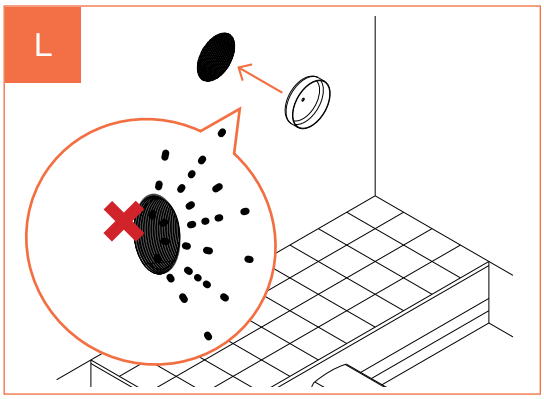
L